500 X 400 X 120MM BOWL

Model EPWI5007B | rectangular bowl with flat rim, no overflow



Rectangular stainless steel bowl with no overflow and a flat 20mm rim all round, for undermount, weld-in or inset fitting. The base is pitched towards a waste hole in the corner.

DIMENSIONS (mm)

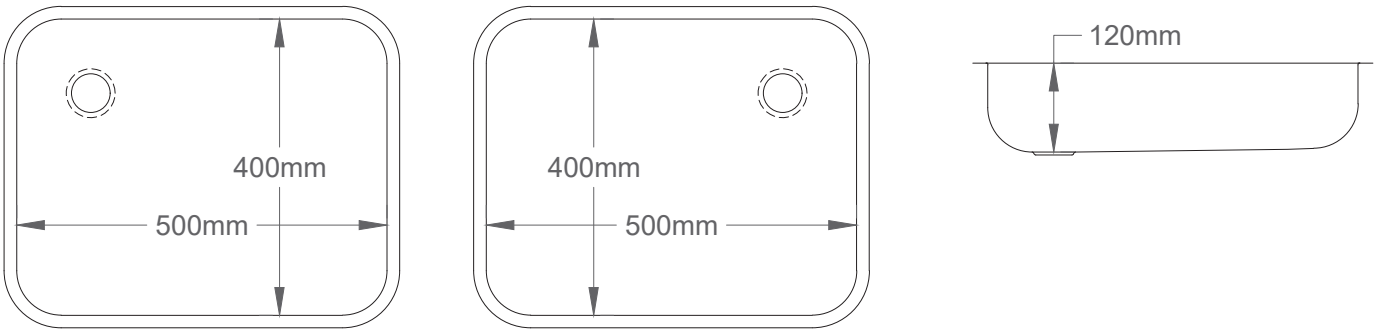

Shown with left hand and right hand waste positions.

TECHNICAL DATA

Material	1mm 304 grade stainless steel
Finish	Electropolished
Bowl size	500 x 400 x 120mm deep (inside)
Rim	Flat 20mm rim all round
Fitting	Undermount, weld-in or inset
Waste	54mm waste hole for a 1½" waste fitting, left or right hand corner
Overflow	None. An overflow hole can be punched on request