CHILLED DRINKING FOUNTAIN & BOTTLE FILLER

Model CSFO-TH-002 | Full pedestal, back to wall, with bottle filler and drinking bubbler



A stainless steel full pedestal, back to wall drinking fountain cooler with a bottle and glass filler tap and a drinking bubbler, both operated by self closing push buttons.

Mains water feed, a drain and an earthed electrical socket are required. Ideal for gyms, offices and schools.

IMPORTANT: FILL THE ICE BANK BEFORE SWITCHING ON.
Before the unit is connected to the power, remove the access cover and fill the ice bank with approx. 5 litres of water (mains water is fine). The unit must not run with an empty ice bank. After delivery, let it stand upright for 2 hours before installing.

DIMENSIONS (mm)

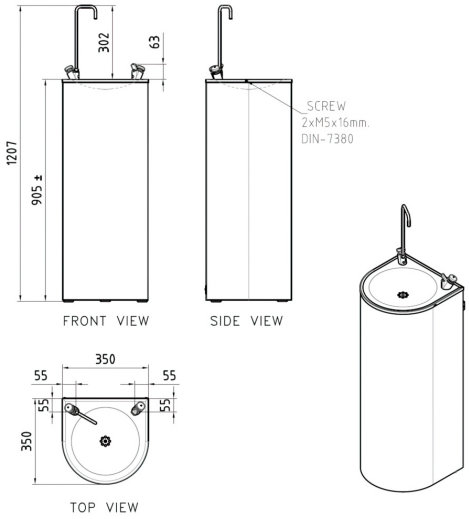

TECHNICAL DATA

Material	304 grade stainless steel, brushed finish
Dimensions	350 x 350 x 905mm high, 1207mm to the top of the bottle filler. Bowl Ø280 x 40mm
Taps	Bottle filler and fixed (non-swivel) drinking bubbler, self closing push buttons
Cooling	Ice bank, approx. 5 litres. Adjustable thermostat. R134a refrigerant (45g), climate class N
Output	20 litres per hour at 4 to 10°C (room and inlet water at 20°C)
Electrical	220V AC, 50Hz. Cooling capacity 210W, power consumption 55W. Earthed socket required
Water	3/8" mains inlet, 1.4 to 2.65 bar (140 to 265 kPa). Ø25mm drain outlet
Installation	Floor standing on 3 levelling feet, secured with the wall bracket supplied. Rear at least 25mm from the wall for ventilation
Weight	23.5kg (empty ice bank)