1800MM WASH TROUGH, LEG PEDAL OPERATED

Model WT1800KP | 3 person, wall mounted, with leg pedal frame

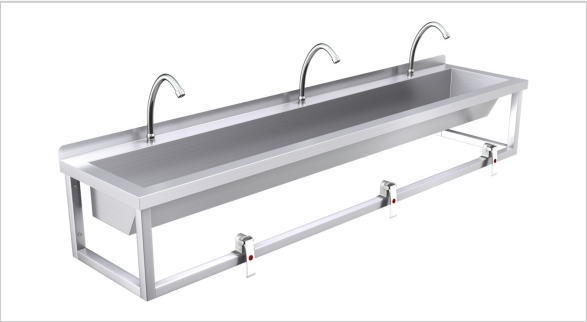

A three person, 1800mm long stainless steel wall mounted wash trough with leg pedal operation. A stainless steel frame below the trough carries one pedal valve per position, so water is controlled hands-free.

The 1½" waste outlet is centrally located. Supplied with waste fitting and heavy duty wall brackets.

Front legs, a taller upstand and custom sizes are available as options.

DIMENSIONS (mm)

PLAN

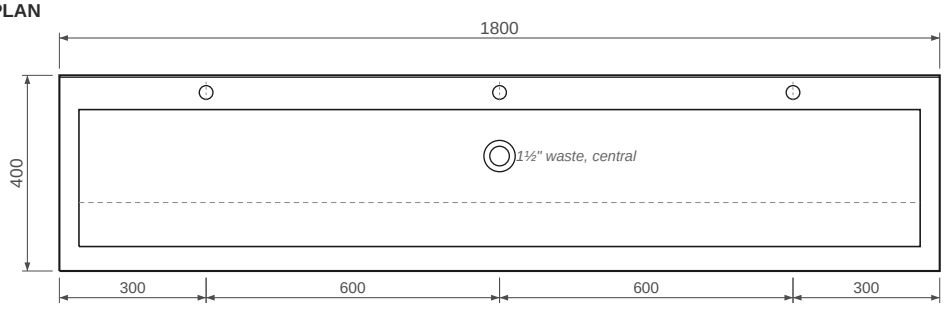

SIDE VIEW

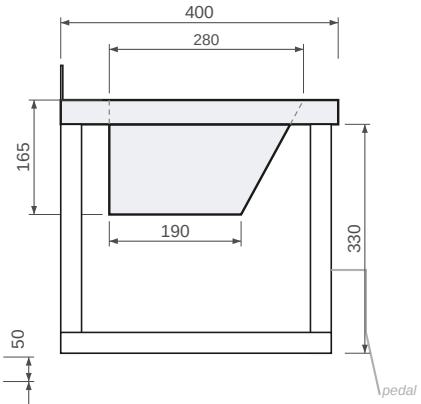

FRONT ELEVATION

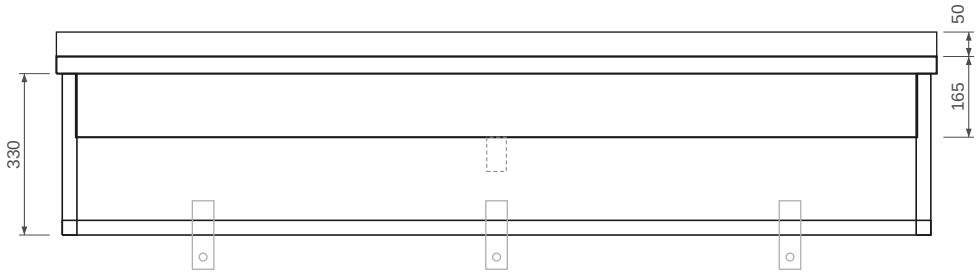

TECHNICAL DATA

Material	1.5mm 304 grade stainless steel, brushed finish
Overall size	1800 x 400 x 165mm, plus 50mm rear upstand
Trough	280mm wide x 165mm deep, centrally wasted
Tap positions	3 positions, 300mm from each end, then at 600mm centres. Tap holes drilled per order to suit the tap specification
Operation	Leg pedal valves, one per position, on a 30 x 30mm stainless steel box section frame, 330mm below the deck
Waste	1½" outlet, waste fitting included
Mounting	Wall mounted on heavy duty brackets, one at each end
Fitting height	To suit the site, typically 900mm to the rim
Options	Front legs, taller upstand, custom sizes