1800MM HIGH BACK WASH TROUGH

Model WTHB1800 | 3 person, wall mounted, 400mm high backsplash



A three person, 1800mm long stainless steel wall mounted wash trough with a 400mm high backsplash, designed for wall mounted tap outlets. Made in Ireland.

The 1½" waste outlet is centrally located. Supplied with waste fitting and heavy duty wall brackets.

Front legs and custom sizes are available as options.

DIMENSIONS (mm)

PLAN

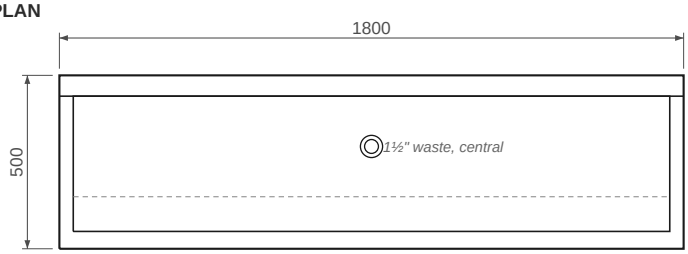

SIDE VIEW

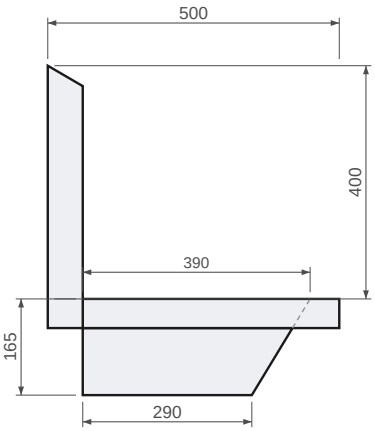

FRONT ELEVATION

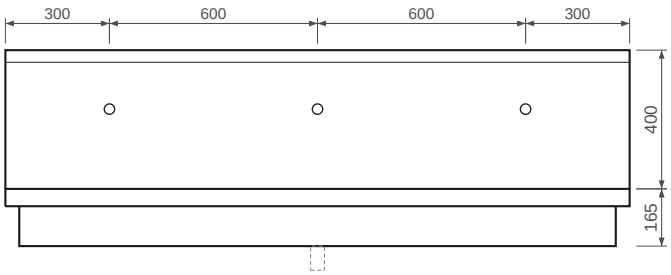

TECHNICAL DATA

Material	1.5mm 304 grade stainless steel, brushed finish
Overall size	1800 x 500 x 165mm, plus 400mm high backsplash
Trough	390mm wide x 165mm deep, centrally wasted
Backsplash	400mm high x 60mm deep
Tap positions	3 positions, 300mm from each end, then at 600mm centres. Taps mount on the backsplash, holes drilled per order to suit the tap specification
Waste	1½" outlet, waste fitting included
Mounting	Wall mounted on heavy duty brackets, one at each end
Fitting height	To suit the site, typically 900mm to the rim
Options	Front legs, custom sizes

TAP OPTIONS

WTHB1800SC	Self closing, non-concussive taps
WTHB1800SN	Sensor operated taps
WTHB1800LP	Leg pedal operated, with frame. See separate datasheet