1200MM INSET WASH TROUGH

Model WTIN1200NFOL | Fully pressed inset trough with tap holes and overflow



A 1200mm long, fully pressed stainless steel inset wash trough for setting into timber, granite, metal and similar worktops.

The 1½" waste outlet is centrally located. Supplied with tap holes, an overflow and the waste fitting.

DIMENSIONS (mm)

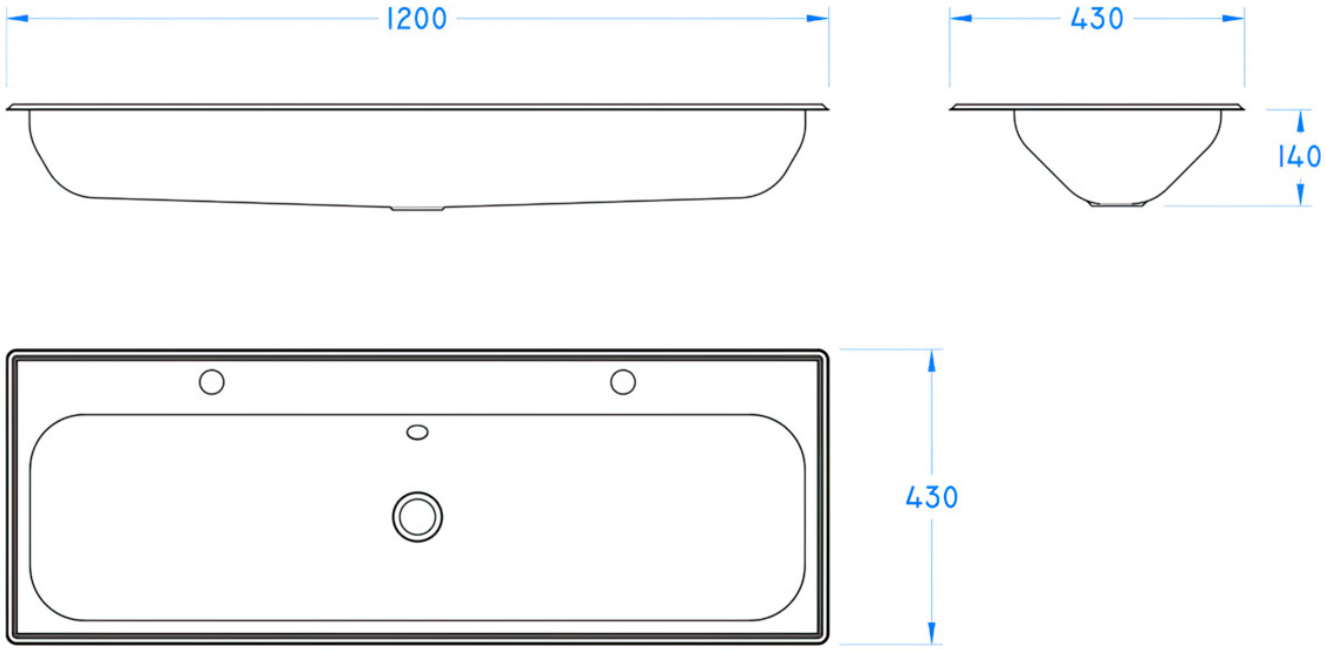

TECHNICAL DATA

Material	Stainless steel, fully pressed
Overall size	1200 x 430 x 140mm
Mounting	Inset into a worktop
Waste	1½" outlet, central, waste fitting included
Tap holes	Provided
Overflow	Provided