1800MM WASH TROUGH WITH SPLASHBACK

Model WTIN1800 | Fully pressed, wall mounted, with 150mm high splashback



An 1800mm long, fully pressed stainless steel wall mounted wash trough with a 150mm high splashback.

The 1½" waste outlet is centrally located. Supplied with waste fitting and wall brackets. Tap holes are not provided as standard but can be supplied as an optional extra.

DIMENSIONS (mm)

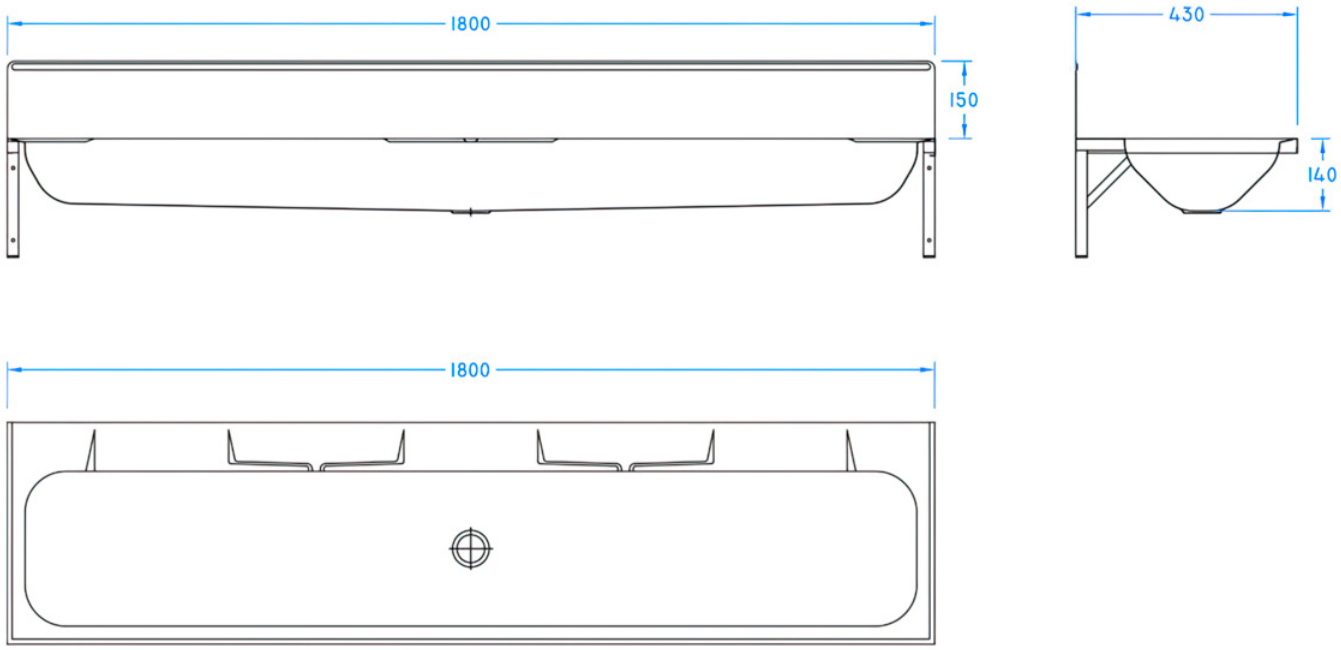

TECHNICAL DATA

Material	Stainless steel, fully pressed
Overall size	1800 x 430 x 140mm, plus 150mm splashback
Mounting	Wall mounted, wall brackets included
Waste	1½" outlet, central, waste fitting included
Tap holes	Not provided as standard, available as an optional extra